DIAMANT - KERNBOHRMASCHINE TYP DK 09
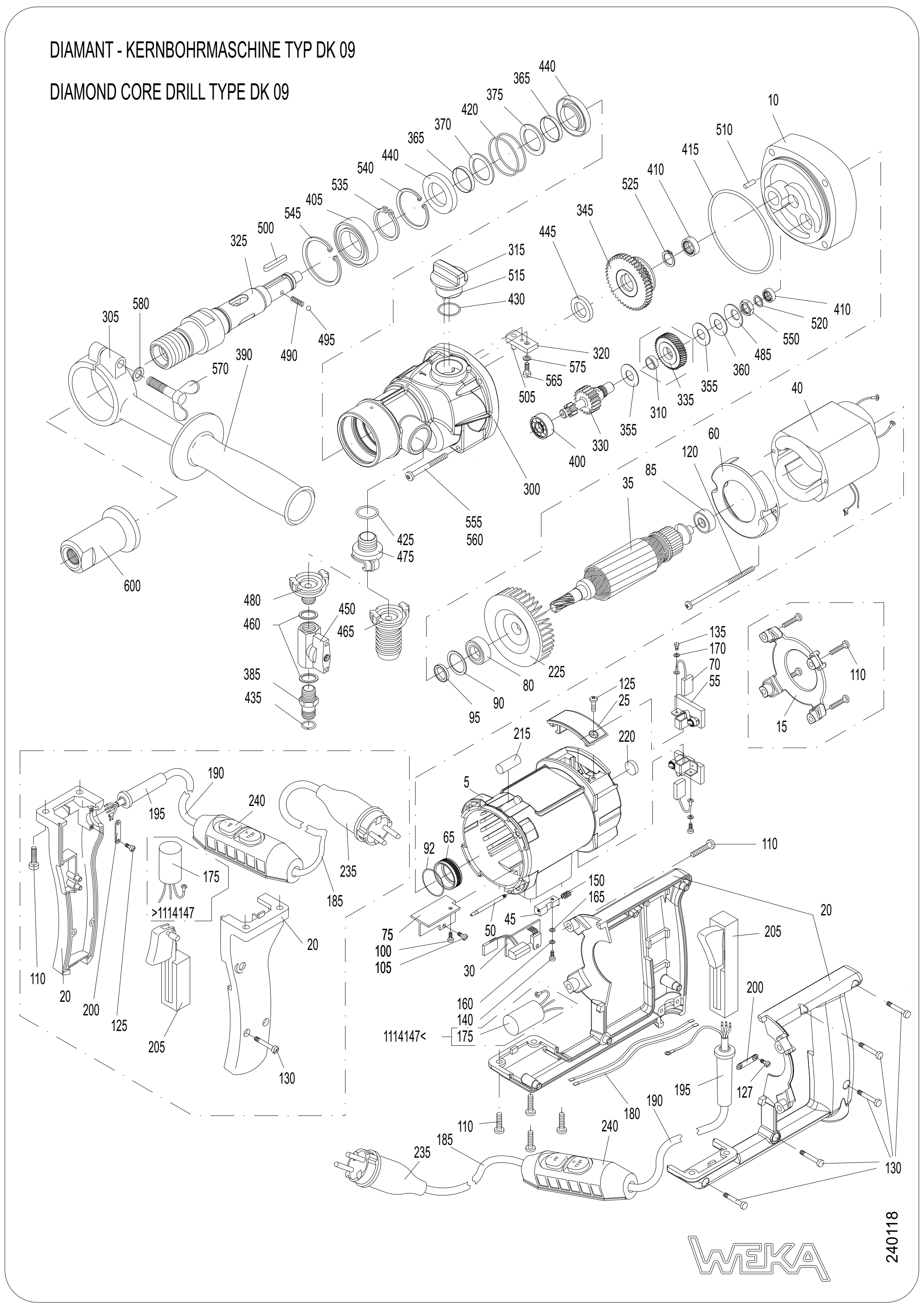
DIAMOND CORE DRILL TYPE DK 09