DIAMANT-KERNBOHRMASCHINE TYP DK118
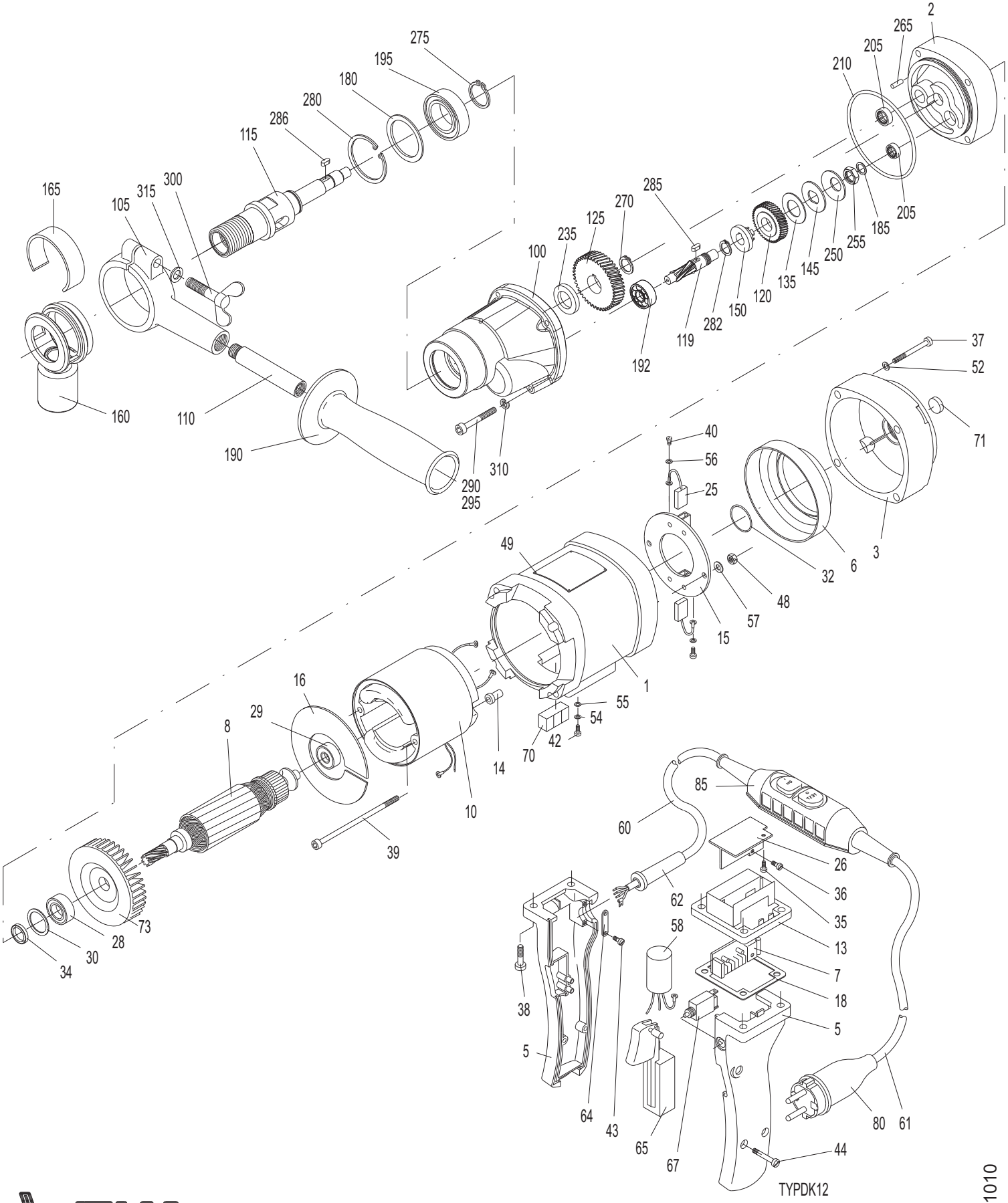
DIAMOND CORE DRILL TYPE DK118